ENCORE
POWER EQUIPMENT

EW32FS481V
EW36FS481V
EW48FS481V
EW32FS481VCA
EW36FS481VCA
EW48FS481VCA

OPERATORS MANUAL

ENCORE MANUFACTURING

A DIVISION OF WORLDLAWN POWER EQUIPMENT, INC.

ENCOREEQUIPMENT.COM

2415 ASHLAND AVE

BEATRICE, NE 68310

800-267-4255

FAX – 402-223-4103

Contents

SAFETY 9
Safety Alert Symbol 9
TRAINING 9
PREPARATION 9
OPERATION 11
SLOPE OPERATION 12
MAINTENANCE AND STORAGE 13
SAFETY AND INSTRUCTIONAL DECALS 15
SPECIFICATIONS 17
MODEL NUMBERS 17
WEIGHT AND DIMENSIONS (36/48) 17
ENGINE 17
FUEL SYSTEM 17
ELECTRICAL SYSTEM 17
TRANSMISSION 17
CUTTING DECK (36/48) 17
TIRES 17
ASSEMBLY INSTRUCTIONS 18
FINAL CHECK/ADJUSTMENT 19
OPERATION 19
OPERATOR CONTROLS 19
TRANSMISSION SELECTOR LEVER 19
STEERING LEVERS 19
OPC LEVERS 19
SAFETY INTERLOCK 20
CHOKE CONTROL 20
THROTTLE CONTROL 20
BRAKE LOCKS 20
PARK BRAKE 20
IGNITION SWITCH 20

HOUR METER 20
BLADE ENGAGEMENT SWITCH 20
PRE-START 21
OPERATING INSTRUCTIONS 21
STARTING THE ENGINE 21
BLADE ENGAGEMENT 21
DISENGAGING THE BLADES 22
STOPPING THE ENGINE 22
DRIVING THE MACHINE 22
DRIVING FORWARD 22
ADJUSTING THE CUTTING HEIGHT 22
TRANSPORTING 23
TRANSPORTING A UNIT 23
LOADING A UNIT 24
MAINTENANCE 24
RECOMMENDED MAINTENANCE SCHEDULE(S) 25
CHECK ENGINE OIL LEVEL 26
CHECK MOWER BLADES 26
CHECK SAFETY INTERLOCK SYSTEM 26
CHECK FOR LOOSE HARDWARE 27
SERVICE AIR CLEANER 27
CHANGE ENGINE OIL 28
CHANGE ENGINE OIL FILTER 28
CHECK TIRE PRESSURES 29
CHECK CONDITION OF BELTS 29
LUBRICATE GREASE FITTINGS 29
CHECK SPARK PLUGS 29
COPPER-BASED ANTI-SEIZE 29
DIELECTRIC GREASE 29
ADJUSTMENTS 30
TRANSMISSION DRIVE BELT TENSION 30

DRIVE WHEEL BELT TENSION 30
MOWER DECK DRIVE BELT TENSION 30
STEERING LEVER ADJUSTMENT 30
PARK BRAKE ADJUSTMENT 30
FORWARD TRACKING ADJUSTMENT 30
NEUTRAL ADJUSTMENT 31
RH DECK SPINDLE DRIVE BELT TENSION 31
CLEANING 32
CLEAN ALL DEBRIS FROM ENGINE AND EXHAUST SYSTEM AREA. 32
CLEAN DUST AND DIRT FROM CYLINDER HEAD FINS. 32
CLEAN DEBRIS FROM MACHINE 32
CLEAN GRASS BUILD-UP UNDER DECK 32
TROUBLESHOOTING 33
WIRING SCHEMATICS 34
CUTTING HEIGHT ADJUSTMENTS 35
Evaporative Emission Control Warranty Statement ..... **Error! Bookmark not defined.**

SAFETY

Safety Alert Symbol

This symbol means: **ATTENTION! BECOME ALERT! YOUR SAFETY IS INVOLVED!**

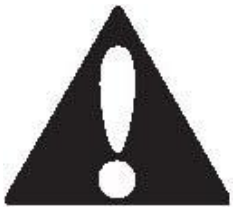

The safety alert symbol appears above information which alerts you to unsafe actions or situations and will be followed by the word **DANGER, WARNING,** or **CAUTION.**

DANGER: White lettering/Red background.

Indicates failure to observe the safety instructions will result in death or serious injury.

WARNING: Black letters on orange background.

Indicates failure to observe safety instructions could result in death or serious injury.

CAUTION: Black letters on yellow background.

Indicates failure to observe the safety instructions may result in death or serious injury.

TRAINING

- Read the instructions carefully. Become familiar with the safe operation of the equipment, operator controls, and safety signs.
- All operators need to be trained before operating this unit.
- Never let children or untrained people operate the equipment without proper instruction.
- Keep everyone, especially children and pets, away from the area of operation. Remember that the operator or user is responsible for accidents or hazards occurring to other people or their property.

PREPARATION

- Evaluate the terrain to determine what accessories and attachments are needed to properly and safely perform the job. Use only accessories and attachments approved by **ENCORE**
- The use of personal protective equipment, such as (but not limited to) safety glasses, hearing protection, substantial footwear and long trousers is highly recommended.

CAUTION

This machine produces sound levels in excess of 85 dBA at the operator's ear and can cause hearing loss through extended periods of exposure.

Wear hearing protection when operating this machine.

- Thoroughly inspect the area where the equipment is to be used and remove all stones, sticks, wires, bones, and other foreign objects which may damage the equipment or cause personal injury to operator or bystanders.

- Check that the operator's presence controls, safety switches, and shields are attached and functioning properly. Do Not operate unless they function properly.

DANGER

In certain conditions gasoline is extremely flammable and highly explosive.

A fire or explosion from gasoline can burn you, others and cause property damage.

- Refuel outdoors, on level ground while engine is cold.
- Never remove fuel cap or add fuel when engine is running or when engine is hot.
- Never fill the fuel tank so that gasoline level rises above the bottom of the filler neck to allow for gasoline expansion and prevent fuel spillage.
- If fuel is spilled, DO NOT attempt to start the engine. Move away from the area of the spill and avoid creating any source of ignition until fuel vapors have dissipated.
- Do not smoke while refueling and stay away from an open flame or where gasoline fumes may be ignited by spark.
- Do not operate without entire exhaust system in place and in proper working condition.
- Do not place any equipment that is leaking gasoline in an enclosed trailer.
- Be sure all fuel tanks and gasoline storage containers have proper caps installed to prevent spillage and minimize vapor escaping into the trailer.

DANGER

In certain conditions during fueling, static electricity can be released causing gasoline vapors to ignite.

A fire or explosion from gasoline can burn you, others, and cause property damage.

- Purchase and store gasoline only in an approved container
- Always place gasoline containers on the ground away from your vehicle while filling.
- Do not fill gasoline containers inside a vehicle or on a truck or trailer bed because interior carpets or plastic truck bed liners may insulate the container and slow the loss of any static charge.
- When practical, remove gas powered equipment from the truck or trailer and refuel the equipment with its wheels on the ground.
- If this is not possible, then refuel such equipment on a truck or trailer from a portable container, rather than from a gasoline dispenser nozzle.
- If a gasoline dispenser nozzle must be used, keep the nozzle in contact with rim of the fuel tank or container opening at all times until fueling is complete.

WARNING

Gasoline is harmful or fatal if swallowed. Long-term exposure to vapors and failure to use caution may cause serious injury or illness.

- **Avoid prolonged breathing of vapors.**
- **Keep face away from nozzle and gas tank/container opening.**
- **Keep away from eyes and skin.**
- **Never siphon by mouth.**

OPERATION

Although hazard control and accident prevention are partially dependent upon the design and configuration of the equipment, these factors are also dependent upon the awareness, concern and proper training of the personnel involved in the operation, transport, maintenance and the storage of the equipment. It is essential that all Operator Safety Mechanisms be connected and in operating condition prior to use for mowing.

⚠WARNING

Operating engine parts, especially the muffler, become extremely hot. Severe burns can occur on contact and debris, such as leaves, grass, brush, etc. can catch fire.

- **Allow engine parts, especially the muffler, to cool before touching.**
- **Remove accumulated debris from muffler and engine area.**

⚠WARNING

Engine exhaust contains carbon monoxide, which is an odorless deadly poison that can kill you.

Do Not run engine indoors or in a small confined area where dangerous carbon monoxide fumes can collect.

- Operate only in daylight or good artificial light, keeping away from holes and hidden hazards.
- Be sure all drives are in neutral and parking brake is engaged before starting engine.
- Never raise deck with blades running.
- Never operate the mower with damaged guards, shields, or covers. Always have safety shields, guards, switches and other devices in place and in proper working condition.
- Stop engine, wait for all moving parts to stop and engage parking brake:
    - Before refueling
    - Before dumping the grass catcher
    - Before making height adjustments
- Park machine on level ground. Stop engine, wait for all moving parts to stop, remove key and engage parking brake:
    - Before checking, cleaning or working on the mower.
    - After striking a foreign object or machine develops an abnormal vibration (inspect machine for damage and repair before resuming operation)
    - Before clearing blockages
    - Before leaving the operator position
- Never mow with the discharge deflector raised, removed or altered unless there is a grass collection system or mulch kit in place and working properly.
- Do Not change the engine governor setting or over speed the engine.

⚠ WARNING

Hands, feet, hair, clothing, or accessories can become entangled in rotating parts. Contact with rotating parts can cause traumatic amputation or severe lacerations.

Do Not operate the machine without guards, shields, and safety devices in place and working properly.

Keep hands, feet, hair, jewelry, or clothing away from rotating parts.

DO NOT operate the mower when people, especially children, or pets are in the area.

- Stop the blades, slow down, and use caution when transporting the mower to and from the area to be mowed or crossing surfaces other than grass.
- Do not operate the mower under the influence of alcohol or drugs.
- Be alert, slow down and use caution when making turns. Look behind and to the side before changing directions.
- Use extreme care when loading and unloading the machine into a trailer or truck.
- Be aware of the mower discharge path and direct discharge away from others.
- Use care when approaching blind corners, shrubs, trees, or other objects that may obscure vision.

SLOPE OPERATION

Use extreme caution when mowing and/or turning on slopes as loss of traction and/or tip-over could occur. The operator is responsible for the safe operation on slopes.

⚠ DANGER

Mowing on wet grass or steep slopes can cause sliding and loss of control.

- Mow across slopes, never up and down.
- Do Not mow slopes when grass is wet.
- Do Not mow near drop-offs or near water.
- Do Not mow slopes greater than 15 degrees.
- Reduce speed and use extreme caution on slopes.
- Avoid sudden turns or rapid speed changes.
- Remove or mark obstacles such as rocks, tree limbs, etc. from the mowing area. Tall grass can hide obstacles.
- Be aware that operating on wet grass, across steep slopes or downhill may cause the mower to lose traction. Loss of traction to the drive wheels may result in sliding and a loss of braking and steering.
- Watch for ditches, holes, rocks, dips and rises that change the operating angle, as rough terrain could overturn the machine.
- Always avoid sudden starting or stopping on a slope. If tires lose traction, disengage the blades and proceed slowly off the slope.
- Use extreme care with grass catchers or attachments. These can change the stability of the machine and cause loss of control.

MAINTENANCE AND STORAGE

- Before any maintenance, disengage drives, lower implement, set parking brake, stop engine and remove key or disconnect spark plug wire. Wait for all moving parts to stop before adjusting, cleaning or repairing.
- Park machine on level ground. Never allow untrained personnel to service machine
- For engine maintenance, follow the engine manufacture's recommendations as stated in the engine manual.
- Keep engine, engine area, free from accumulation of grass, leaves, excessive grease, or oil and other debris. These materials may be combustible which could result in a fire.
- Maximum mowing results and safety can only be achieved if the mower is properly maintained and operated correctly.
- Check all bolts frequently to maintain proper tightness.
- Keep all guards, shields and safety devices in place and in safe working condition.
- All replacement parts must be the same as, or equivalent to, the parts supplied on original equipment.
- Use care when checking blades. Wrap the blade(s) or wear gloves, and use caution when servicing them. Only REPLACE damaged blades, NEVER straighten or weld them.
- Disconnect the battery cable from the negative battery post when the unit will be allowed to sit for more than 30 days without use.
- Store fuel in a container specifically designed for this purpose in a cool, dry place.
- Gasoline powered equipment or fuel containers should not be stored in a basement or any enclosed area where open pilot lights or heat appliances are present.
- Shut off fuel while storing or transporting. Do not store fuel near flames or drain indoors.

⚠ DANGER

Charging or jump starting the battery may produce explosive gasses. Battery gases can explode causing serious injury.

- **Keep sparks, flames, or cigarettes away from battery.**
- **Ventilate when charging or using battery in an enclosed space.**
- **Make sure venting path of battery is always open once battery is filled with acid**
- **Always shield eyes and face from battery.**

⚠ DANGER

Battery electrolyte contains sulfuric acid, which is poisonous and can cause severe burns. Swallowing electrolyte can be fatal or if it touches skin can cause severe burns.

- **Wear safety glasses to shield eyes, and rubber gloves to protect skin and clothing when handling electrolyte.**
- **Do Not swallow electrolyte.**
- **In the event of an accident, flush with water and seek medical attention immediately.**

⚠ CAUTION

If the ignition is in the "ON" position there is potential for sparks and engagement of components. Sparks could cause an explosion or moving parts could engage causing personal injury.

Be sure ignition switch is in the "OFF" position before charging the battery.

⚠ WARNING

Removing standard, original equipment parts and accessories may alter the warranty, traction, and safety of the machine. Unauthorized changes to the engine, fuel or venting system, may violate EPA and CARB regulations.

⚠ WARNING

Hydraulic fluid escaping under pressure can penetrate skin and cause injury. Fluid accidentally injected into the skin must be surgically removed within a few hours by a doctor familiar with this form of injury or gangrene may result.

- **Make sure all hydraulic fluid hoses and lines are in good condition and all hydraulic connections and fitting are tight before applying pressure to hydraulic system.**
- **Keep body and hands away from pinhole leaks or nozzles in components charged with high pressure hydraulic fluid.**
- **Use cardboard or paper, not your hands, to find hydraulic leaks.**
- **Safely relieve all pressure in the hydraulic system by placing the motion control levers in neutral and shutting off the engine before performing any work on the hydraulic system.**

SAFETY AND INSTRUCTIONAL DECALS

- Keep all safety signs legible. Remove all grease, dirt and debris from safety signs and instructional labels.
- Replace all worn, damaged, or missing safety signs.
- When replacement components are installed, be sure that current safety signs are affixed to the replaced components.
- If an attachment or accessory has been installed, make sure current safety signs are visible.

New safety signs may be obtained from your authorized ENCORE equipment dealer.

- Safety signs may be affixed by peeling off the backing to expose the adhesive surface. Apply only to a clean, dry surface. Smooth to remove any air bubbles.
- Familiarize yourself with the following safety signs and instructional labels. They are critical to the safe operation of your machine.

8303

363023

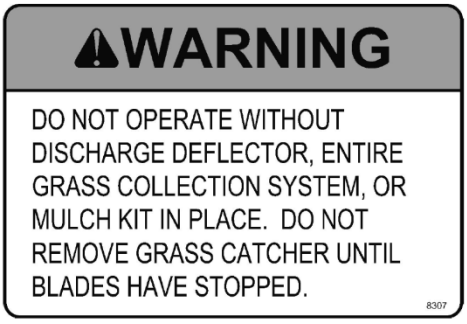

8307

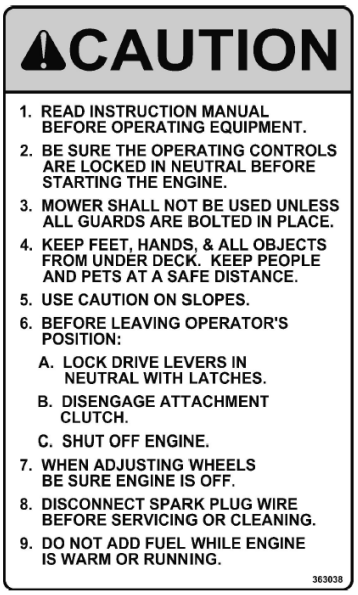

363038

8008

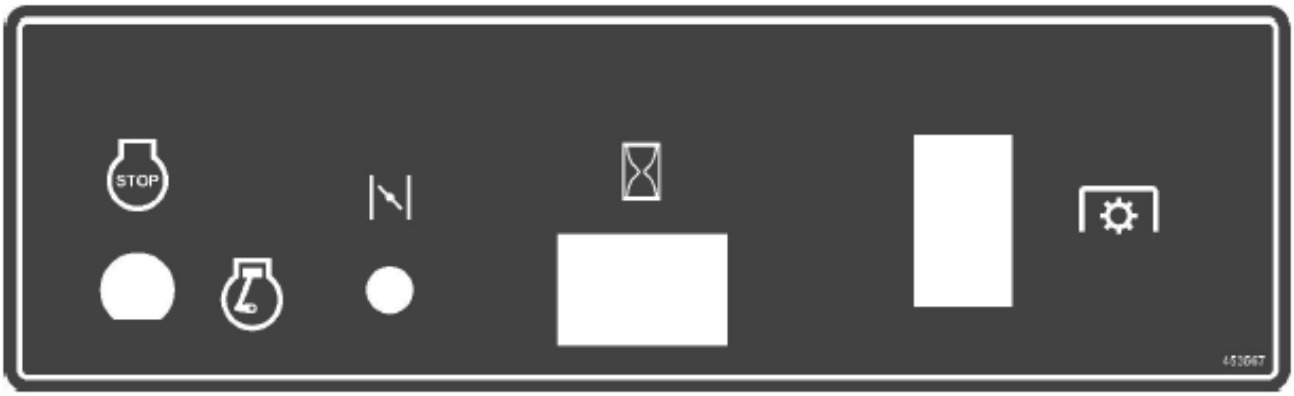

CONSOLE DECAL – 453567

OPERATOR MUST DISENGAGE
CLUTCH BEFORE SHIFTING GEARS

CLUTCH OPERATION DECAL 363233

R N 1 2 3 4 5

TRANSMISSION POSITION DECAL 363241

THROTTLE DECAL 453564

DECAL GRAPHICS

ENGINE OFF

ENGINE ON

CHOKE

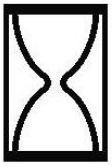

HOUR METER

BLADE SWITCH

NEUTRAL

REVERSE

FAST

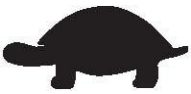

SLOW

SPECIFICATIONS

MODEL NUMBERS

WYW36FS481V
WYW48FS481V
WYW36FS481VCA
WYW48FS481VCA

WEIGHT AND DIMENSIONS (36/48)

- Length: 77"/75"
- Width (Def. Down): 47”/60"
- Width (Def. Up): 42”/55"
- Wheel Base: 39”/37"
- Wheel Track-Front: 25”/36"
- Wheel Track-Rear: 29”/29"
- Weight (lbs): 453/512

ENGINE

- Kawasaki FS481V
- See your Engine Owner’s Manual
- RPM: High Idle: 3600
  Low Idle: 1550

FUEL SYSTEM

- Capacity: 5 Gal
- Type of Fuel: Regular Unleaded Gasoline 87 Octane or higher
- Fuel Filter: In-line

ELECTRICAL SYSTEM

- Charging Coil: 5A DC Rectified Clutch Coil
- Battery Type: n/a
- Battery Class: n/a
- Battery Voltage: n/a
- Polarity: Neg. Ground
- Fuses: (1) 15A

TRANSMISSION

- Pro-Gear T7511
- No Lubrication Service Is Required
- Speed: 0-5.0 mph Fwd
  0-1.0 mph Reverse

CUTTING DECK (36/48)

- Cutting Width: 36”/48"
- Discharge: Side
- Blade Size: 18”/16-3/8"
- Deck Drive: Electric Clutch
- Deck: 7 ga Welded Steel
- Deck Depth: 5”
- Cutting Height: 1.5” to 4.5”
- Mulching Kit: Optional

TIRES

- Front: 4.10-3.50x4 Smooth
- Pressure 20 psi
- Rear: 13x6.50-6 Turf Saver
- Pressure 12 psi

ASSEMBLY INSTRUCTIONS

1. Remove top boards of crate and all loose items from inside. Remove outside frame work so that the mower is setting on the pallet.
2. Using 6 – 3/8” X 1” bolts (3 – for each caster) and 6 – 3/8” Whiz Lock nuts, bolt the casters into place so that the whiz Lock nuts are on the inside of deck.
3. Using 2 – 5/16” X 1” bolts and 2 – 15/16” Nylok nuts, attach the discharge deflector to the deck.
4. Using 2 – 5/16” X 1” bolts with 2 – 5/16” flat washers and 2 – 15/16” Nylok nuts, take the shifter lever with grip and bolt onto the bottom side of the shifter bracket on the transmission. Place the 5/16” flat washers on the slotted hole side of the shifter bracket under the 5/16” nut. Position the shift lever so that it slides freely along the top side of the shifter plate but still hits the stop for reverse.
5. Place the fuel tank on the mounting platform so that the vent tube on the filler neck is in front. Secure with nylon hold down straps, pulling tension on the buckles until tight.
6. Using the remaining 4 - 3/8” X 1” bolts and the 4 – 3/8” Nylok nuts, attach the handlebars, three mounting positions are available and have been provided to ensure operator comfort. Connect the harness to the neutral switch on top of the transmission, and the engine plug to the engine harness. Run the throttle and choke cables around the left hand side of the engine and attach to the engine control plate, adjust for proper operation. Using the supplied metal cable clips and plastic ties, secure the wire harness and control cables to handlebars as necessary.
7. Attach the two steering control rods by removing the 5/16” swivels from the idler engagement brackets and screwing them onto the rods. Temporarily replace the swivels in the engagement brackets to measure, adjust the effective length of both rods so that the end of the steering lever is 2” - 3" below the handlebar (Fig. 1) and then secure the swivels with the hairpin cotter pins. This adjustment establishes the neutral position of the steering lever and can be adjusted to suit the operator, keeping in mind that there must be sufficient travel remaining to allow braking when the brake locks are engaged.
8. Now you must verify that the parking brake is properly adjusted. Apply the park brake by pulling the steering levers up so that the brake locks can be engaged. If the lever cannot be moved up far enough to allow the engagement of the brake lock, the brake link must be adjusted. If the brake lock can be engaged but this position does not provide adequate braking to hold the machine on a hill, the brake must be adjusted. Shorten the effective length of the adjusting rod to increase the braking effort, lengthen the effective length of the adjusting rod to decrease the braking effort.
9. At this point, check the engine oil level and adjust as required. Make sure that the air pressure in both rear tires is set at 12 psi, tracking will be adversely affected if they are not the same. Adjust the front tire pressures to 20 psi.

Fig. 1

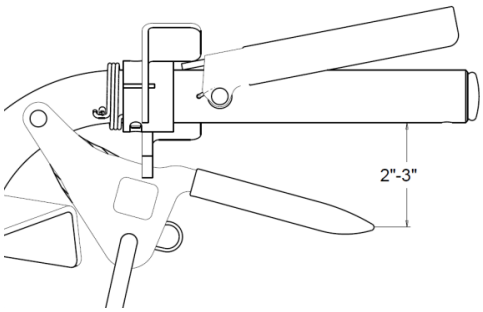

FINAL CHECK/ADJUSTMENT

1. With the engine ignition switch in the off position, and the mower on level ground, grasp the handlebars and pull the mower toward you while slowly moving the steering levers closer to the handlebars. At some point, the mower should be allowed to move freely, “free wheel”, before the brake begins to engage. If this is not the case you must readjust the neutral position as described in paragraph 6. Now move the steering levers to the “park” position, a significant force should be encountered before being able to engage the brake lock. If this is not the case you must readjust the park brake as described in paragraph 7.
2. Check air pressure in drive wheels (12 psi), and caster wheels (20 psi), this is critical for proper mower tracking.
3. Check for proper belt tension (see belt tension guide). Keep a 1/8” to 1/4” clearance between belt guides and belts.
4. After a 10 hour “Break-In” period go through steps 1 thru 3.

Proper adjustments must be maintained to ensure safe, trouble free, long life operation of the mower. After completing the foregoing instructions and recommended procedures you are ready to put the mower into operation.

OPERATION

OPERATOR CONTROLS

TRANSMISSION SELECTOR LEVER

Located on top of the transmission

The transmission selector lever is used to change the output performance of the transmission. Position "N", Neutral, disengages the transmission which provides no output. Position "R", Reverse, provides drive at a low speed in the reverse direction. Positions "1-2-3-4" provide drive in the forward direction at increasingly greater rates of travel. Position "5" provides forward travel at speeds generally unacceptable for achieving a good quality of cut and is intended strictly for transport.

STEERING LEVERS

Located beneath handlebars grip area

The steering levers control the forward rotation of the respective wheel. (Speed is determined by throttle position and transmission drive setting) Pulling on a lever gradually releases that drive, causing the machine to turn in that direction. Further movement of the lever gradually engages the brake, resulting in sharper turns.

It is highly recommended that the park brake be applied, by engaging the brake locks, whenever the operators hands are not in contact with the handlebars.

OPC LEVERS

Located above handlebars grip area

The OPC (Operator Presence Control) levers are part of an important safety system designed to shut off the engine if the operator leaves the operator position before securing the machine.

At least one of the OPC levers must be held down in order to keep the engine running while the transmission is in any position other than neutral and/or the blade switch is on.

SAFETY INTERLOCK

TO START: Transmission selector lever must be in NEUTRAL position, blade switch must be OFF, and ignition switch in RUN.

TO RUN: One or both OPC levers must be held down while the transmission is in any position other than NEUTRAL and/or the blade switch is in the ON position.

TO LEAVE OPERATOR POSITION: Blade switch must be OFF and transmission in the NEUTRAL position.

CHOKE CONTROL

Located on the control console

The choke is used to aid in starting a cold engine. Pulling the choke knob up will move the choke into the “on” position, pushing the choke down will return the choke to the “off” position.

THROTTLE CONTROL

Located on the control console

The throttle is used to control engine speed. Moving the throttle lever forward will increase engine speed and moving the throttle lever to the rear will decrease engine speed. Moving the throttle forward into the detent is full throttle.

BRAKE LOCKS

Located in front of steering levers

The brake locks are used to hold the steering levers in the park brake position. When the steering levers are all the way up, the locks may be rotated fully to secure them.

PARK BRAKE

A function of the steering levers of both wheels

To engage, pull steering levers all the way up and engage both brake locks.

To release, pull up on the levers and release the locks.

When parking on a steep slope, the wheels must be chocked or blocked in addition to the brake being engaged. The unit must be tied down and brake engaged when transporting.

IGNITION SWITCH

Located on the control console.

The ignition switch is used to start and stop the engine. The switch has two positions “OFF” and "ON". Insert key into switch and rotate clockwise to the “ON” position before attempting to start the engine. Rotate the switch to the "OFF" position to stop the engine.

NOTE: To start the engine, the transmission lever must be in the neutral position and the blade switch must be off.

HOUR METER

Located on the control console

The hour meter records the number of hours that the engine has run.

BLADE ENGAGEMENT SWITCH

Located on console

Switch must be pulled out (up) to engage the blades. Switch is pushed in to disengage the blades.

PRE-START

Fill fuel tank on level ground. For best results use only clean, fresh regular grade unleaded gasoline with an octane rating of 87 or higher.

IMPORTANT: Never use methanol, gasoline containing methanol, gasohol containing more than 10% ethanol (E15 or E85), or white gas. Performance issues may result. Also the fuel system and/or engine could be damaged which may not be covered under warranty.

It is acceptable to use oxygenated fuel with up to a maximum 10% ethanol or 15% MTBE by volume.

Do Not add oil to gasoline

Do Not over fill fuel tank. Fill the fuel tank to the bottom of the filler neck. The empty space in the tank allows gasoline to expand. Overfilling may result in fuel leakage or damage to the engine or emission system.

Make sure you understand the controls, their locations, their functions, and their safety requirements.

Refer to the Maintenance section and perform all the necessary inspection and maintenance steps.

OPERATING INSTRUCTIONS

STARTING THE ENGINE

1. Move the transmission selector lever to the neutral position.
2. Move both steering levers to the park brake position and engage the brake locks.
3. Push in (down) on the PTO switch to the “disengage” position.
4. Place the throttle midway between the “SLOW” and “FAST” positions.
5. On a cold engine, pull the choke lever up into the “ON” position.
6. On a warm engine, leave the choke in the “OFF” position.
7. Turn ignition switch to the “ON” position.
8. Give the recoil starter a few quick pulls to start the engine.
9. If the choke is in the “ON” position, gradually return choke to the “OFF” position as the engine warms up.

BLADE ENGAGEMENT

DANGER

The rotating blades under the mower deck are dangerous. Blade contact can cause serious injury or kill you.

Do Not put hands or feet under the mower or mower deck when the blades are engaged.

DANGER

An uncovered discharge opening will allow objects to be thrown in an operator’s or bystander’s direction. Also, contact with the blade could occur. Thrown objects or

blade contact can cause serious injury or death.

Never operate the mower with the discharge deflector raised, removed, or altered unless there is a grass collection system or mulch kit in place and working properly.

The PTO switch engages the cutting blades. Be sure all persons are clear of mower deck and discharge area before engaging the PTO.

1. Set throttle to “MIDWAY” position.
2. Depress either of the OPC levers.
3. While holding the OPC lever, pull up on the blade control switch (PTO). the clutch should engage and the mower blades begin rotating.
4. Increase the throttle to the "FAST” position before mowing.

DISENGAGING THE BLADES

1. Set the throttle midway between the “SLOW” and “FAST” positions.
2. Push down on the PTO switch to disengage the blades.

STOPPING THE ENGINE

1. Bring the unit to a full stop.
2. Engage both brake locks.
3. Move the transmission selector lever to the neutral position.
4. Push down on the PTO switch to disengage the blades.
5. Place the throttle midway between the “SLOW” and “FAST” positions.
6. Turn the ignition switch to the “OFF” position to stop the engine.
7. Remove the key to prevent children or other unauthorized persons from starting engine.

DRIVING THE MACHINE

⚠CAUTION

Erratic movement of the steering levers may cause the Operator to lose control of the machine, which may cause damage to the machine or personal injury.

- **Use slow and steady movement of the steering levers.**
- **Use caution when making turns.**
- **Slow the machine down before making sharp turns.**

DRIVING FORWARD

1. Start the engine as described in "STARTING THE ENGINE" previously in this manual.
2. Move the transmission selector lever to the desired position.
3. Pull in on both steering levers to release the parking brakes and then release the steering levers slowly, this will cause the machine to begin moving in accordance with the transmission selection.
4. Steering is accomplished by moving the steering levers as described in "STEERING LEVERS" previously in this manual.

Travel speed is controlled by the position of the throttle and transmission selector lever. REMEMBER - you must bring the machine to a full stop and engage both park brakes before moving the transmission selector lever to a different position.

5. To stop, slowly move both steering control levers to the park brake position and engage brake locks.

ADJUSTING THE CUTTING HEIGHT

The cutting height of the mower deck is adjustable from 1.5 to 4.5 inches in 1/4 inch increments. Before attempting to make any adjustments always make sure that the mower is on level ground, the park brakes are securely locked and the ignition key has been removed.

Use the supplied chart and accompanying diagram located in the back of this manual to establish which aspects need to change to produce the desired result.

TRANSPORTING

TRANSPORTING A UNIT

Use a heavy-duty trailer or truck to transport the machine. Lock brakes and block wheels. Securely fasten the machine to the trailer or truck with straps, chains, cable, or ropes. Be sure that the trailer or truck has all necessary lighting and marking as required by law. Secure a trailer with a safety chain.

CAUTION

This unit does not have proper turn signals, lights, reflective markings, or a slow moving vehicle emblem. Driving on a street or roadway without such equipment is dangerous and can lead to accidents causing personal injury. Driving on a street or roadway without such equipment may also be a violation of State laws and the operator may be subject to traffic tickets and/or fines.

Do Not drive a unit on a public street or roadway.

WARNING

Loading a unit on a trailer or truck increases the possibility of backward tip-over. Backward tip-over could cause serious injury or death.

- **Use extreme caution when operating a unit on a ramp**
- **Use only a single, full width ramp; Do Not use individual ramps for each side of the unit.**
- **If individual ramps must be used, use enough ramps to create an unbroken ramp surface wider than the unit.**

- **Do Not exceed a 20 degree angle between ramp and ground or between ramp and trailer or truck.**
- **Avoid sudden acceleration while driving unit up a ramp to avoid tipping backward.**
- **Avoid sudden deceleration while backing unit down a ramp to avoid tipping backward.**

LOADING A UNIT

Use extreme caution when loading units on trailers or trucks. One full width ramp that is wide enough to extend beyond the rear tires is recommended instead of individual ramps for each side of the unit. A full width ramp provides a surface to walk on behind the unit. If it is not possible to use one full width ramp, use enough individual ramps to simulate a full width continuous ramp.

Ramp should be long enough so that the angles between the ramp and the ground and the ramp and the trailer or truck do not exceed 20 degrees. A steeper angle may cause mower deck components to get caught as the unit moves from ramp to trailer or truck. Steeper angles may also cause the unit to tip backward. If loading on or near a slope, position the trailer or truck so it is on the down side of the slope and the ramp extends up the slope. This will minimize the ramp angle. The trailer or truck should be as level as possible.

IMPORTANT: Do Not attempt to turn the unit while on the ramp, you may lose control and drive off the side.

Avoid sudden acceleration when driving up a ramp and sudden deceleration when backing down a ramp. Both maneuvers can cause the unit to tip backward.

MAINTENANCE

Note: The *left* and *right* side of the machine is *determined* by standing in the *normal operator's position.*

⚠ WARNING

Remove the key from the ignition switch, engage parking brakes, and pull the wire(s) off the spark plug(s) before you do any maintenance. Also push the wire(s) aside so accidental contact with the spark plug does not occur.

While maintenance or adjustments are being made, someone could start the engine. Accidental starting of the engine could seriously injure you or other bystanders.

⚠ WARNING

Allow the engine to cool completely before service or making repairs around the engine area.

The engine can become very hot. Touching a hot engine can cause severe burns.

RECOMMENDED MAINTENANCE SCHEDULE(S)

Maintenance Service Interval	Maintenance Procedure
Before each use or daily	• Check the engine oil level • Check the mower blades • Check the safety interlock system • Check for loose hardware • Check for belt obstructions • Check for fuel and oil leakage • Clean the engine and exhaust system area • Clean the grass and debris build-up from the machine and cutting deck, including under the deck
After the first 8 hours	• Change the engine oil
After the first 100 hours	• Torque the wheel lug nuts • Clean the dust and dirt from cylinder and cylinder head fins • Clean the spark plugs, check and adjust gap if necessary
Every 40 hours	• Check the condition of the belts • Check the tire pressures • Grease the caster wheel bearings • Grease the deck belt idler arm bearing
Every 100 hours	• Change the engine oil
Every 200 hours	• Change the engine oil filter
Every 250 hours	• Replace the primary air cleaner • Check the secondary air cleaner – replace if dirty. See the Engine manual for additional information
Every 500 hours	• Torque the wheel lug nuts • Replace the secondary air cleaner. See the Engine manual for additional information.
Monthly	• Check the battery charge
Yearly	• Grease the front caster pivots • Grease the brake lever pivots • Grease the transmission output shaft couplers

CHECK ENGINE OIL LEVEL

Check the engine oil daily before starting the engine otherwise shortage of the engine oil may cause serious damage to the engine such as seizure.

- Place the engine on a level surface. Clean area around the oil gauge before removing it.
- Remove the oil gauge and wipe it with a clean cloth.
- Reinsert the oil gauge to check the oil level. The level should be between "ADD" and "FULL" marks. Do not overfill.
- Install and tighten the oil gauge

CAUTION

Do not fill above the "FULL" mark. Excess oil will cause a smoking condition, and may cause the engine to overheat.

WARNING

CALIFORNIA PROPOSITION 65

BATTERY POSTS, TERMINALS, AND RELATED ACCESSORIES CONTAIN LEAD AND LEAD COMPOUNDS, CHEMICALS KNOWN TO THE STATE OF CALIFORNIA TO CAUSE CANCER AND REPRODUCTIVE HARM. WASH HANDS AFTER HANDLING.

CHECK MOWER BLADES

Service Interval: Before each use or daily

Stop engine, wait for all moving parts to stop, and remove key. Engage parking brakes.

1. Lift deck and secure in raised position as stated in the **Clean Grass Build-Up Under Deck** section.
2. Inspect blades and sharpen or replace as required.
3. Reinstall the blades (if they were removed) in the following order:
   A. Install blade bolt through washer, spacers, and blade in same order as removed to maintain desired cutting height.
   B. Apply lubricant to threads of blade bolt as needed to prevent seizing. Copper-based anti-seize is preferable. Grease is an acceptable substitute. Install blade bolt finger tight then torque the blade bolts to 50-60 ft-lb (68-81 N-m).

WARNING

Incorrect installation of the blade or components used to retain the blade can be dangerous. Failure to use all original components and assembled as shown could allow a blade or blade component to be thrown out from under the deck resulting in serious personal injury or death.

Always use original equipment, i.e. blades, blade bushings, and blade bolts as shown.

CHECK SAFETY INTERLOCK SYSTEM

Service Interval: Before each use or daily

CAUTION

It is essential that operator safety mechanisms be connected and in proper operating condition prior to use.

- **Do not tamper with the interlock switches.**
- **Check the operation of the interlock switches daily and replace any damaged switches before operating the machine.**

Understanding the Safety Interlock System

The safety interlock system is designed to prevent the mower blades from rotating unless:

- Operator presence is detected when either OPC lever is in the operating position.
- The blade control switch (PTO) is pulled **on.**

The safety interlock system is designed to stop the mower blades if you release both OPC levers while the PTO switch is in the engage position.

Checking the Safety Interlock System

1. With the park brakes "ON" (locked), the transmission in position "N" (neutral), and the blade switch "OFF" (down), start the engine and set the throttle to an idle.
2. While standing in the operator zone with the OPC levers "UP" (released), pull the blade switch up to the "ON" position, the engine should begin to die.
3. Before the engine stops, push one of the OPC levers to the "DOWN" (engaged) position, the engine should continue to run.
4. Release the OPC lever, the engine should begin to die.
5. Before the engine stops, move the other OPC lever to the "DOWN" (engaged) position, the engine should continue to run.
6. Release the OPC lever, the engine should begin to die.
7. Before the engine stops, push the blade switch down to the "OFF" position, the engine should continue to run.
8. Ensuring that the park brakes are still "ON" (locked), move the transmission lever to position "1" (slow), the engine should begin to die.
9. Before the engine stops, push one of the OPC levers to the "DOWN" (engaged) position, the engine should continue to run.
10. Release the OPC lever, the engine should begin to die.
11. Before the engine stops, move the other OPC lever to the "DOWN" (engaged) position, the engine should continue to run.
12. Move the transmission lever to position "N" (neutral) and release the OPC lever, the engine should continue to run. Shut the engine off by turning the ignition key to "STOP".

If the Safety Interlock System does not appear to be working correctly it must be repaired before allowing anyone to operate the machine.

CHECK FOR LOOSE HARDWARE
Service Interval: Before each use or daily

1. Stop engine, wait for all moving parts to stop and remove key. Lock both parking brakes.
2. Visually inspect machine for any loose hardware or any other possible problem. Tighten hardware or correct problem before operating.

SERVICE AIR CLEANER
Service Interval: 250 Hours

1. Stop engine, wait for all moving parts to stop and remove key. Engage parking brakes.
2. See the Engine Owner's Manual for maintenance instructions.

CHANGE ENGINE OIL
Service Interval: 100 hours

NOTE: Change oil and filter after first eight (8) hours of operation.

1. Stop engine, wait for all moving parts to stop and remove key. Engage parking brake.
2. Drain oil while engine is warm.
3. The oil drain valve is located on the left side of the engine. Place the pan under the machine to catch the oil. It may be helpful to attach a flexible tube to the end of the drain valve to help direct the flow of oil into the pan.
4. Open the oil drain valve and allow the oil to drain, then close the oil drain valve and remove the plastic tube if one was used.
5. Clean around oil fill cap and remove cap. Fill to specified capacity and replace cap.
6. Use oil recommended in the Engine Owner's Manual. DO NOT overfill. Wipe up any spilled oil from engine deck mounting surfaces.
7. Start the engine and check for leaks. Stop engine and recheck oil level.

CHANGE ENGINE OIL FILTER
Service Interval: 200 hours

1. Follow steps 1 through 4 above for engine oil change
2. Replace the oil filter per the engine Owner's Manual. Clean around the oil filter and carefully remove the filter by unscrewing it. Make sure no oil drains onto the belt drive or clutch through the holes in the engine deck. Before the new filter is installed, apply a thin coating of oil on the surface of the rubber seal. Turn filter clockwise until rubber seal contacts the filter adapter, then tighten filter and additional 2/3 to 3/4 turn.
3. Follow steps 5 through 6 above to refill engine oil.

CHECK TIRE PRESSURES
Service Interval: Every 40 hours

1. Stop engine, wait for all moving parts to stop and remove key. Engage parking brake.
2. Inflate drive tires to 12 psi.
3. Inflate caster tires to 20 psi.

CHECK CONDITION OF BELTS
Service Interval: Every 40 hours

1. Stop engine, wait for all moving parts to stop and remove key. Engage parking brake.
2. Look on the top side of the cutting deck to check the mower blade drive belt condition.
3. Look under the engine deck to check the pump drive belt condition.
4. Check all idler arms to be sure they pivot freely.

LUBRICATE GREASE FITTINGS
Note: See chart for service intervals.

1. Stop engine, wait for all moving parts to stop and remove key. Engage parking brake.
2. Lubricate fittings with NGLI #2 multi-purpose grease.

Lubrication Chart

FITTING LOCATIONS	INITIAL PUMPS	NUMBER OF PLACES	SERVICE INTERVAL
1. Deck Belt Idler Arm	1	1	Every 40 Hours
2. Front Caster Wheel Hubs	1	2	Every 40 Hours
3. Transmission Couplers	1	2	Yearly
4. Brake Levers Pivots	1	2	Yearly
5. Front Caster Pivots	1	2	Yearly

CHECK SPARK PLUGS
Service Interval: As required

Remove spark plugs, check condition and reset gaps, or replace with new plugs. See Engine Owner's Manual.

COPPER-BASED ANTI-SEIZE
Copper-based anti-seize can be used in the following locations:

1. On threads of Blade Bolts. See **Check Mower Blades section.**
2. Between engine crankshaft, pump drive sheave, and clutch.

DIELECTRIC GREASE
Dielectric grease can be used on all blade type electrical connections to prevent corrosion and loss of contact.

ADJUSTMENTS

Note: Disengage PTO, shut off engine, wait for all moving parts to stop, engage parking brake, and remove key before servicing, cleaning, or making any adjustments to the unit.

WARNING

POTENTIAL FOR SERIOUS INJURY

Certain procedures required the vehicle engine to be operated and the vehicle to be raised off of the ground. To prevent possible injury to the servicing technician and/or bystanders, insure the vehicle is properly secured.

CAUTION

Raising the mower for service or maintenance relying solely on mechanical or hydraulic jacks could be dangerous. The mechanical or hydraulic jacks may not be enough support or may malfunction allowing the unit to fall, which could cause injury.

Do Not rely solely on mechanical or hydraulic jacks for support. Use adequate jack stands or equivalent support.

TRANSMISSION DRIVE BELT TENSION

Adjust sliding idler to obtain 1/2" belt deflection midway between engine and transmission pulleys.

DRIVE WHEEL BELT TENSION

Self adjusting.

MOWER DECK DRIVE BELT TENSION

Adjust eye bolt to obtain spring length of 3 1/2" to 3 3/4" measured over 19 coils (1/32" gap between coils).

STEERING LEVER ADJUSTMENT

Steering characteristics are affected by the relationship between the drive wheel clutching and braking positions. The greater the distance the steering lever must travel between these two positions, the slower the turning response time will be, resulting in increased operator effort.

Remove the hairpin cotter pin from the 5/16" swivel in the engagement bracket and adjust the effective length of the steering lever rod so that the end of the steering lever is 2” - 3" below the handlebar as in Fig. 1 on page 18. Keep in mind that the smaller this dimension, the shorter the distance between clutching and braking functions.

Reinstall the 5/16" steering rod swivels and secure with the hairpin cotter pins.

PARK BRAKE ADJUSTMENT

If the parking brakes do not hold securely, adjustment is required:

1. Remove the hairpin cotter pin from the 3/8" swivel at the top end of the brake adjusting rod.
2. Shorten the effective length of the brake adjusting rod by turning the 3/8" swivel until the desired amount of braking force is obtained.
3. Reinstall the 3/8" brake rod swivel and the hairpin cotter pin.

FORWARD TRACKING ADJUSTMENT

Although there is no actual adjustment for forward travel tracking, if the machine tends to turn right or left while traveling forward on level terrain, you should:

1. Check tire pressure to ensure equal pressure between drive tires. The correct pressure for the drive tires is 12 psi.
2. Check adjustment of steering levers and park brakes.
3. Check and replace worn wheel drive belts (must be replaced in pairs).

NEUTRAL ADJUSTMENT

This adjustment may be necessary if certain components have been replaced or reinstalled

1. Loosen the two bolts holding the shift lever to the transmission lever and adjust so that the top of it just touches the range indicator panel.
2. Loosen the two bolts holding the range indicator panel in place, this will allow the panel to be adjusted from side to side.
3. Move the panel as far to the left as possible.
4. Ensure that the transmission is in the Neutral position, this will be one position to the right of the full left position which is Reverse.
5. Gently slide the panel to the right until it just makes contact with the shift lever.

RH DECK SPINDLE DRIVE BELT TENSION

This adjustment pertains to only those decks that have 3 spindles.

Adjust tension rod to obtain 1/2" belt deflection midway between right hand and center spindle pulleys.

CLEANING

Service Interval: Before each use or daily (May be required more often in dry or dirty conditions.)

CAUTION

Excessive debris around engine cooling air intake and exhaust system area can cause engine exhaust area and hydraulic system to overheat which can create a fire hazard.

CLEAN ALL DEBRIS FROM ENGINE AND EXHAUST SYSTEM AREA.

1. Stop engine, wait for all moving parts to stop, and remove key. Engage parking brakes.
2. Clean all debris from rotating engine air intake screen around engine shrouding, and exhaust system area.
3. Wipe up any excessive grease or oil around the engine and exhaust system area.

CLEAN DUST AND DIRT FROM CYLINDER HEAD FINS.

Service Interval: Every 100 hours

1. Stop engine, wait for all moving parts to stop, and remove key. Engage parking brake.
2. Remove cooling shrouds from engine and clean cooling fins. Also clean dust, dirt and oil from external surfaces of engine which can cause improper cooling.
3. Make sure cooling shrouds are properly reinstalled. Operating the engine without cooling shrouds will cause engine damage due to overheating.

CLEAN DEBRIS FROM MACHINE

Service Interval: Before each use or daily

1. Stop engine, wait for all moving parts to stop, and remove key. Engage parking brake.
2. Clean off any oil, debris, or grass build-up on the machine and cutting deck, especially under deck belt shields, around the fuel tank, around engine and exhaust area.

CLEAN GRASS BUILD-UP UNDER DECK

Service Interval: Before each use or daily

1. Stop engine, wait for all moving parts to stop, and remove key. Engage parking brakes.
2. Lift the front of unit and support unit using jack stands or equivalent support.

CAUTION

Raising the mower for service or maintenance relying solely on mechanical or hydraulic jacks could be dangerous. The mechanical or hydraulic jacks may not be enough support or may malfunction allowing the unit to fall, which could cause injury.

Do not rely solely on mechanical or hydraulic jacks for support. Use adequate jack stands or equivalent support.

3. Clean out any grass build-up from underside of deck and in discharge deflector.

TROUBLESHOOTING

IMPORTANT: It is essential that all operator safety mechanisms be connected and in proper operating condition prior to mower use.

When a problem occurs, do not overlook the simple causes. For example, starting problems could be caused by an empty fuel tank.

The following table lists some of the common causes of trouble. Do not attempt to service or replace major items or any items that require special training or adjustment procedures. Have this work done by your Service Dealer.

PROBLEM	POSSIBLE CAUSE
Engine will not start or is Hard To Start	No Fuel Too Much Fuel (flooded) Interlocked Controls Not Positioned Properly Air Filter or Air Screen is Dirty Faulty Spark Plug Improper Fuel
Stops Suddenly or Lacks Power	No Fuel or improper Fuel Engine Overloaded Dirt in Fuel Line Air Filter or Air Screen is Dirty Incorrect Oil Level Blocked Fuel Filter
Engine Overheats	Engine Overloaded Dirty Air Filter or Air Screen Dirt in Fuel Line Blocked or dirty cooling fins Incorrect Oil Level
Mower Pulls Left or Right	Unequal Tire Pressure Worn or Defective Drive Wheel Drive Belts Steering Levers Incorrectly Adjusted
Mower Cuts Unevenly	Unequal Tire Pressure Different Quantities of Spindle and/or Caster Spacers Blades Dull or Damaged
Mower Deck Not Engaging	Belt is Broken, Worn, or Out of Adjustment
Mower Vibrates	Blades Dull or Damaged Engine Bolts are Loose
Mower moves slowly or not at all	Transmission Drive belt is loose

WIRING SCHEMATICS

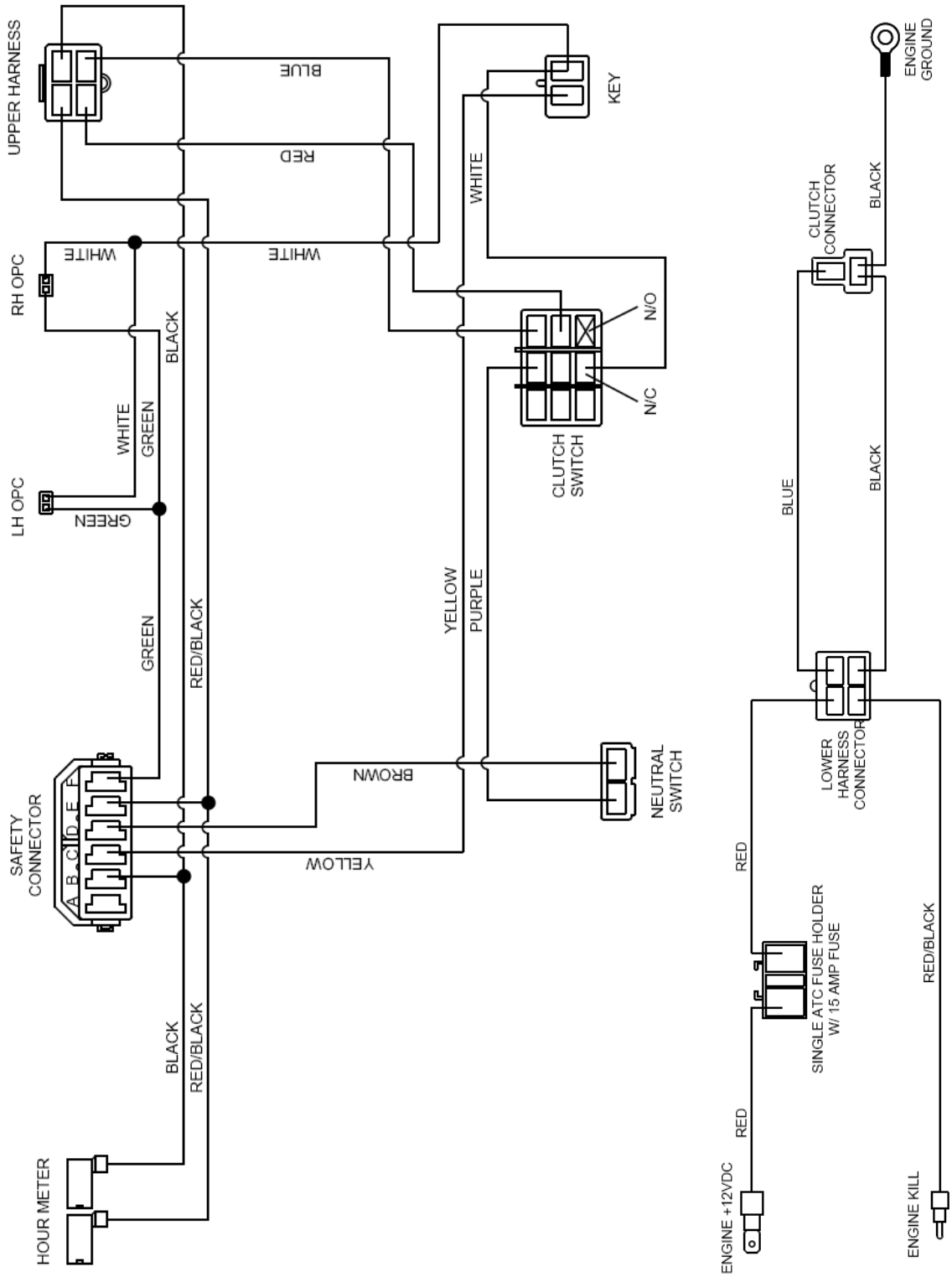

CUTTING HEIGHT ADJUSTMENTS

REAR DECK MOUNT IN HIGHEST POSITION

5 - SPACERS ON TOP OF CASTER ARM = 1 7/8" TO 3 1/8"
4 - SPACERS ON TOP OF CASTER ARM = 2 1/8" TO 3 3/8"
3 - SPACERS ON TOP OF CASTER ARM = 2 1/2" TO 3 3/4"
2 - SPACERS ON TOP OF CASTER ARM = 2 5/8" TO 3 7/8"
1 - SPACERS ON TOP OF CASTER ARM = 2 7/8" TO 4 1/8"
0 - SPACERS ON TOP OF CASTER ARM = 3 1/4" TO 4 1/2"

REAR DECK MOUNT IN LOWEST POSITION

5 - SPACERS ON TOP OF CASTER ARM = 1 1/2" TO 2 3/4"
4 - SPACERS ON TOP OF CASTER ARM = 1 3/4" TO 3"
3 - SPACERS ON TOP OF CASTER ARM = 2" TO 3 1/4"
2 - SPACERS ON TOP OF CASTER ARM = 2 3/8" TO 3 3/8"
1 - SPACERS ON TOP OF CASTER ARM = 2 5/8" TO 3 7/8"
0 - SPACERS ON TOP OF CASTER ARM = 2 7/8" TO 4 1/8"

NOTE: USE 1/4" BLADE SPACERS TO ACHIEVE CUTTING HEIGHT BETWEEN THE ABOVE MEASUREMENTS.

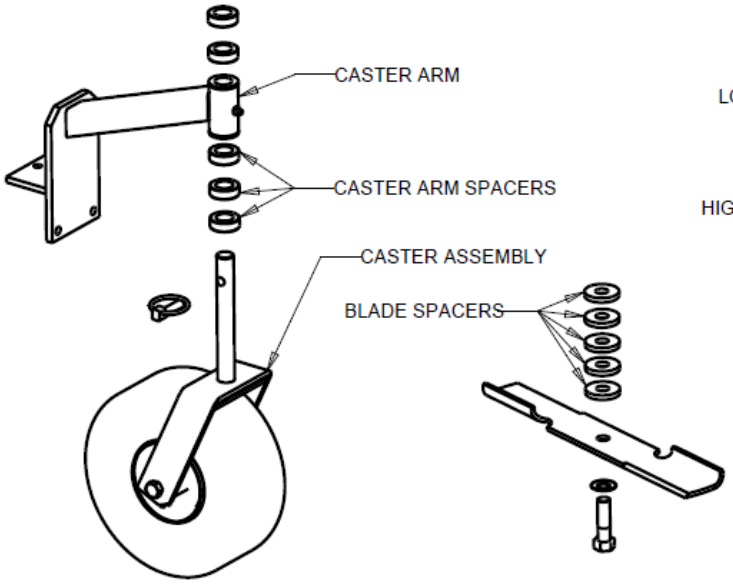

REAR DECK MOUNT POSITION

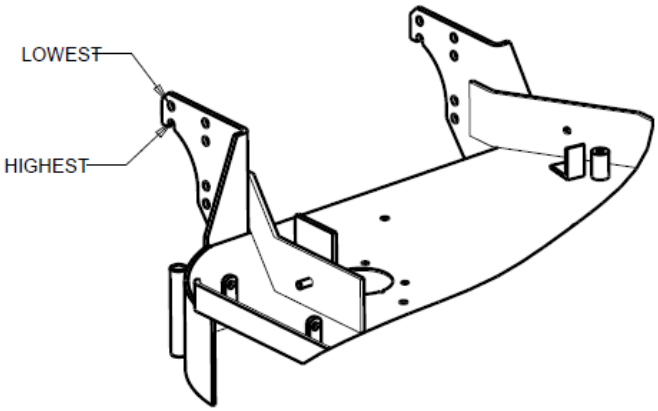

EVAPORATIVE EMISSION CONTROL WARRANTY STATEMENT

CALIFORNIA EVAPORATIVE EMISSION CONTROL WARRANTY STATEMENT

YOUR WARRANTY RIGHTS AND OBLIGATIONS
The California Air Resources Board and Worldlawn Power Equipment is pleased to explain the evaporative emission control system's warranty on the 2019 model year lawn mower. In California, new equipment that use small off-road engines must be designed, built, and equipped to meet the State's stringent anti-smog standards. Worldlawn Power Equipment must warrant the evaporative emission control system on your lawn mower for the period listed below provided there has been no abuse, neglect or improper maintenance of your equipment leading to the failure of the evaporative emission control system.

Your evaporative emission control system may include parts such as: fuel tanks, fuel lines (for liquid fuel and fuel vapors), fuel caps, valves, canisters, vapor hoses, clamps, connectors, and other associated components.

MANUFACTURER'S WARRANTY COVERAGE:
This evaporative emission control system is warranted for two years. If any evaporative emission-related part on your equipment is defective, the part will be repaired or replaced by Worldlawn Power Equipment.

OWNER'S WARRANTY RESPONSIBILITIES:
• As the lawn mower owner, you are responsible for performance of the required maintenance listed in your owner's manual. Worldlawn Power Equipment recommends that you retain all receipts covering maintenance on your lawn mower, but Worldlawn Power Equipment cannot deny warranty solely for the lack of receipts.
• As the lawn mower owner, you should however be aware that Worldlawn Power Equipment may deny you warranty coverage if your fuel tank has failed due to abuse, neglect, or improper maintenance or unapproved modifications.
• You are responsible for presenting your lawn mower to a Worldlawn Power Equipment distribution center or service center as soon as the problem exists. The warranty repairs should be completed in a reasonable amount of time, not to exceed 30 days. If you have a question regarding your warranty coverage, you should contact Worldlawn Power Equipment service at (402) 228-4255.

DEFECTS WARRANTY REQUIREMENTS:
(a) The warranty period begins on the date the engine or equipment is delivered to an ultimate purchaser.
(b) General Evaporative Emissions Warranty Coverage. The fuel tank must be warranted to the ultimate purchaser and any subsequent owner that the evaporative emission control system when installed was:
(1) Designed, built, and equipped so as to conform with all applicable regulations; and
(2) Free from defects in materials and workmanship that causes the failure of a warranted part for a period of two years.
(c) The warranty on evaporative emissions-related parts will be interpreted as follows:
(1) Any warranted part that is not scheduled for replacement as required maintenance in the written instructions must be warranted for the warranty period defined in subsection

(b)-(2). If any such part fails during the period of warranty coverage, it must be repaired or replaced by Worldlawn Power Equipment. Any such part repaired or replaced under the warranty must be warranted for a time not less than the remaining warranty period.

(2) Any warranted part that is scheduled only for regular inspection in the written instructions must be warranted for the warranty period defined in subsection (b)-(2). A statement in such written instructions to the effect of "repair or replace as necessary" will ,not reduce the period of warranty coverage. Any such part repaired or replaced under warranty must be warranted for a time not less than the remaining warranty period.

(3) Any warranted part that is scheduled for replacement as required maintenance in the written instructions must be warranted for the period of time prior to the first scheduled replacement point for that part. If the part fails prior to the first scheduled replacement, the part must be repaired or replaced by Worldlawn Power Equipment. Any such part repaired or replaced under warranty must be warranted for a time not less than the remainder of the period prior to the first scheduled replacement point for the part.

(4) Repair or replacement of any warranted part under the warranty provisions of this article' must be performed at no charge to the owner at a warranty station.

(5) Notwithstanding the provisions of subsection (4) above, warranty services or repairs must be provided at distribution centers that are franchised to service the subject engines or equipment.

(6) The owner must not be charged for diagnostic labor that leads to the determination that a warranted part is in fact defective, provided that such diagnostic work is performed at a warranty station.

(7) Throughout the evaporative emission control system's warranty period set out in subsection (b)(2), Worldlawn Power Equipment must maintain a supply of warranted parts sufficient to meet the expected demand for such parts.

(8) Manufacturer approved replacement parts must be used in the performance of any warranty maintenance or repairs and must be provided without charge to the owner. Such use will not reduce the warranty obligations of the manufacturer issuing the warranty.

(9) The use of any add-on or modified parts will be grounds for disallowing a warranty claim made in accordance with this article. Worldlawn Power Equipment will not be liable under this Article to warrant failures of warranted parts caused by the use of an add-on or modified part.

(10) Worldlawn Power Equipment shall provide any documents that describe the warranty procedures or policies within five working days of request by the Air Resources Board.

EMISSION WARRANTY PARTS LIST:
1) Fuel Tank, 2) Fuel line (for liquid fuel and fuel vapors), 3) Fuel cap, 4) remote vent, 5) Carbon canister

Written instructions for the maintenance and use of the evaporative emissions control system by the owner shall be furnished with each new engine or equipment.

GENERAL PROVISIONS The product warranty described in this document is provided by Encore Manufacturing, a Division of Worldlawn Power Equipment, Inc, ("Encore") and is a limited warranty. Encore will warrant on the terms and conditions herein and applies to the original purchasers of new product from Encore Power Equipment or an authorized Encore dealer/retailer. Encore's sole responsibility with any claim made under this warranty is limited to repair or replacement of any part in the excise of our reasonable discretion, to be defective in materials or workmanship from the original date of purchase (see warranty period below for details) and no claim of breach of warranty shall be cause for rescission, cancellation, or voiding the contract of sale of the mower.

EXCLUSIONS, CONDITIONS, and EXCEPTIONS This limited warranty extends only to those mowers purchased for private residential and commercial use. A mower purchase for any other reason, for example as a rental unit, shall have a (90) ninety day limited warranty under the same terms and conditions as set forth herein. Any work done on or to the mower by anyone other than an authorized Encore dealer/retailer, including the original purchaser, voids all provisions of the warranty except those provisions which limit Encore's liability (as set forth below). This limited warranty specifically excludes normal wear items, included but not limited to belts, blades, and tires. This limited warranty does not extend to any mower or part thereof which has been misused, neglected, damaged, abused, altered, not properly serviced or maintained, or which has been operated in any way contrary to the operating instructions as specified in the owners/operator manual. This limited warranty does not extend to any repair or replacement made necessary by the effects of the weather, environment, transportation, or accidents. The warranty herein is in lieu of other warranties, express or implied, including , without limitation, any implied warranty of merchantability or fitness for a particular use, and is in lieu of any and all other obligations or liability on Encore's part. Under any and all circumstances, Encore's total liability to the owner for any and all claims, losses or damages, including loss of profits, arising out of any cause whatsoever, whether based in contact, negligence or other tort, strict liability breach of warranty or otherwise, shall in no event exceed the purchase price of the mower. In no event shall Encore be responsible for special, incidental, consequential or exemplary damages. This limited warranty specifically excludes parts covered under another manufacturer's warranty.

OBTAINING WARRANTY SERVICE Upon purchase the authorized dealer/retailer must submit the completed warranty registration documentation to Encore to validate the warranty. The owner should retain, and upon request provide, the original bill of sale or proof of purchase. The mower must be returned to an authorized Encore dealer/retailer within the warranty period. The cost of delivering the mower to the authorized dealer and the return delivery shall be the responsibility of the owner. Only authorized Encore dealers/retailer are allowed to perform warranty service.

WARRANTY PERIOD 3 YEARS Models represented for this warranty are as follows:
EW32FS481V, EW36FS481V, EW48FS481V, EW36FS481VH, EW48FS481VH, EW36FS481VHF, EW48FS481VHF

COMPONENT or SYSTEM	WARRANTY SERVICE THROUGH	WARRANTY PROVIDED BY	PERIOD
Engines	Engine Manufacture	Engine Manufacture	2 Years
Five Speed Gearboxes	Encore	Gearbox Manufacture	1 Year
Electric PTO Clutches	Encore	Clutch Manufacture	2 Years
Hydraulic Pumps & Motors	Encore	Hydraulic Manufacture	2 Years
Batteries	Encore	Encore	1 Year
Mower Cutting Deck Shells	Encore	Encore Part & Labor	0-5 Years
Mower Cutting Deck Shells	Encore	Encore Part Only	5-10 Years

ENCORE
POWER EQUIPMENT

ALL RIGHTS RESERVED

EW32FS481V EW36FS481V EW48FS481V OPERATORS MANUAL

CONTENTS SUBJECT TO CHANGE

BELT-DRIVE WALK-BEHIND 202005